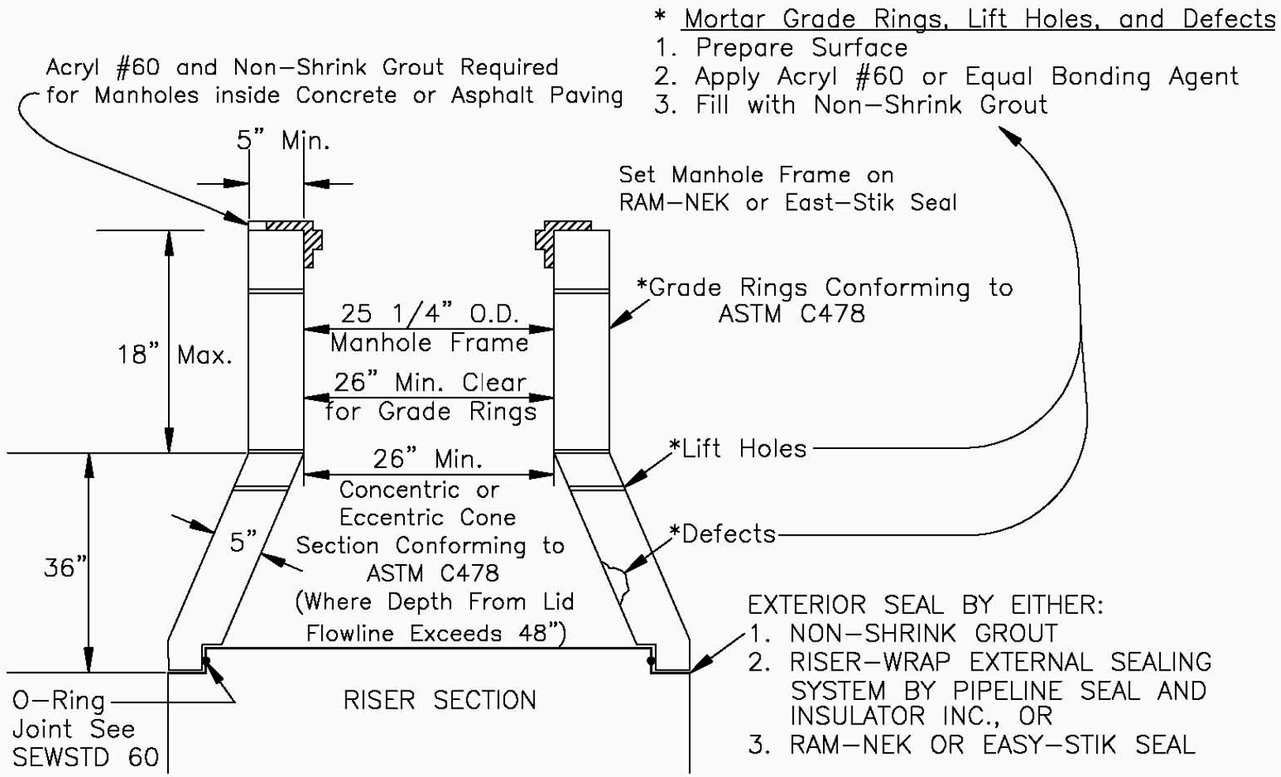

CONE SECTION, GRADE RING
AND MANHOLE FRAME SETTING

FLAT SLAB TOP CONFORMING TO
ASTM C478

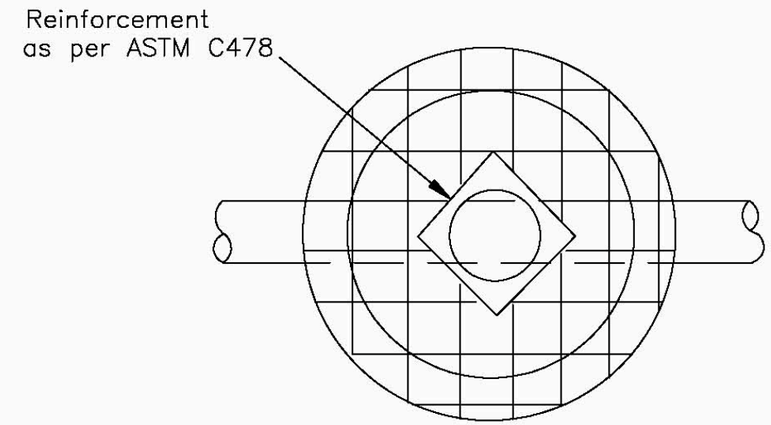

LESS THAN 4' DEEP
FULL I.D. TO TOP

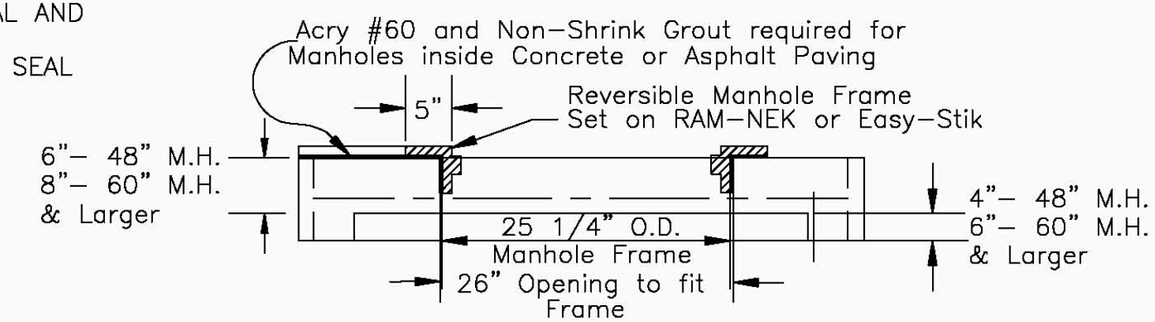

LEAKAGE TESTING OF ALL NEW MANHOLES IS REQUIRED, SEE SEWSTD 50.

ADOPTED BY CITY OF PONCA CITY BOARD OF COMMISSIONERS
OKLAHOMA
February 23, 2008
Revised_____

PRECAST MANHOLE TOP SECTION SANITARY SEWER STANDARD

THE CITY OF
PONCA CITY, OKLAHOMA

CITY ENGINEERING DEPT. * 516 E. GRAND * P. O. BOX 1450 * PONCA CITY, OK. * (580)767-0326, FAX-0325

Designed by	MIKE CHAPMAN	Checked by JIM FAIRBANKS & DARWIN HANEY	
Drawn by	SIMON CORNELL	Revised by MIKE CHAPMAN	
Project No.		Date: OCT 2008	SEWSTD 70